MANIPAL ACADEMY of HIGHER EDUCATION

Question Paper - Report

28-Sep-2025 12:36:20 ~

Logout

Back

Question Paper

MANIPAL ACADEMY OF HIGHER EDUCATION

ENGINEERING MECHANICS AND SMART BUILDINGS [CIV 1003]

Marks: 30 **Duration: 90 mins.**

DESCRIPTIVE

Answer all the questions.

1) The resultant of two forces shown in the figure passes through A. Calculate the resultant and the distance 'a'. (3)

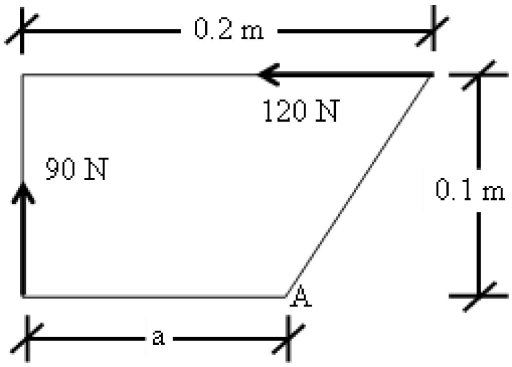

2) Three hikers crossing a footbridge of span 18m is shown in the figure as point loads. Knowing that the weights of the hikers at points C, D and E are 200 N, 175 N and 135 N, respectively, determine the horizontal distance from A to the line of action of the resultant of the three weights when a = 3.3 m. (3)

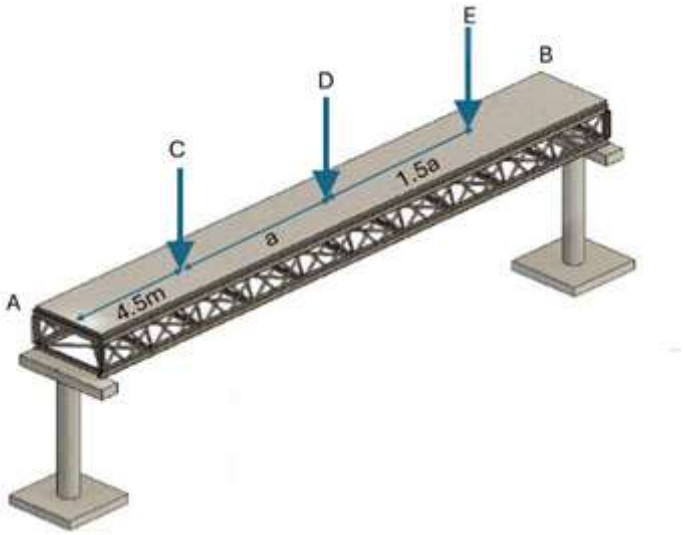

3) Determine the value of P required to push **100kN wedge** rightwards to lift **50kN block** upwards along the plane as shown in the figure. The angle of limiting friction is 15^0 for all the contact surfaces.

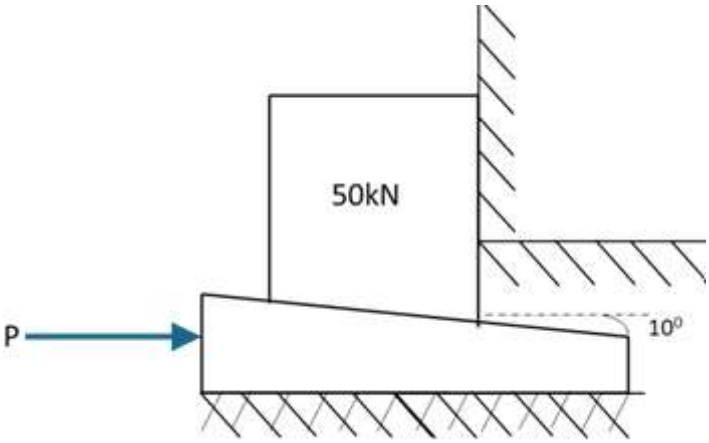

(4)

4) A simply supported beam is loaded as shown in the figure. Calculate the support reactions.

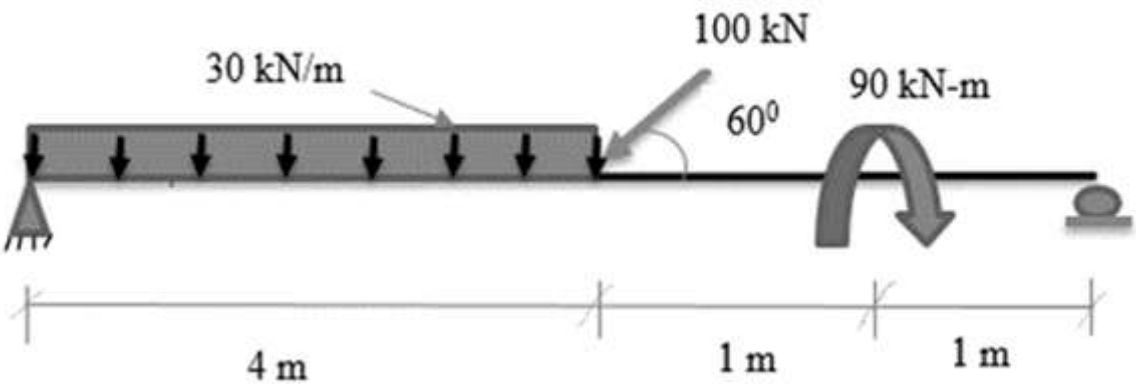

(4)

5) A string is subjected to forces of 5kN and P as shown in the figure. Determine the magnitude of P and the tension induced in various portions of the string.

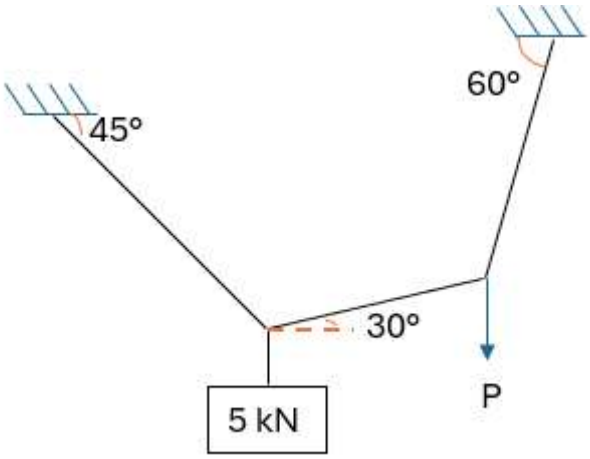

(4)

6) Differentiate between conventional and condensing type of boiler units in HVAC.

(3)

7)	Explain the working mechanism of typical card-based access control system.	(3)
8)	Explain with examples the role and importance of audio and video processors in typical modern classroom audio visual systems.	(3)
9)	Explain the advantages of using Building Information Modelling (BIM) dimensions in construction projects.	(3)

© 2025 All rights reserved. epm epCloud 1.5

^ Top